9. EXLODED VIEWS AND REPLACEMENT PARTS LIST

B. EXPLODED VIEWS OF PANEL PARTS

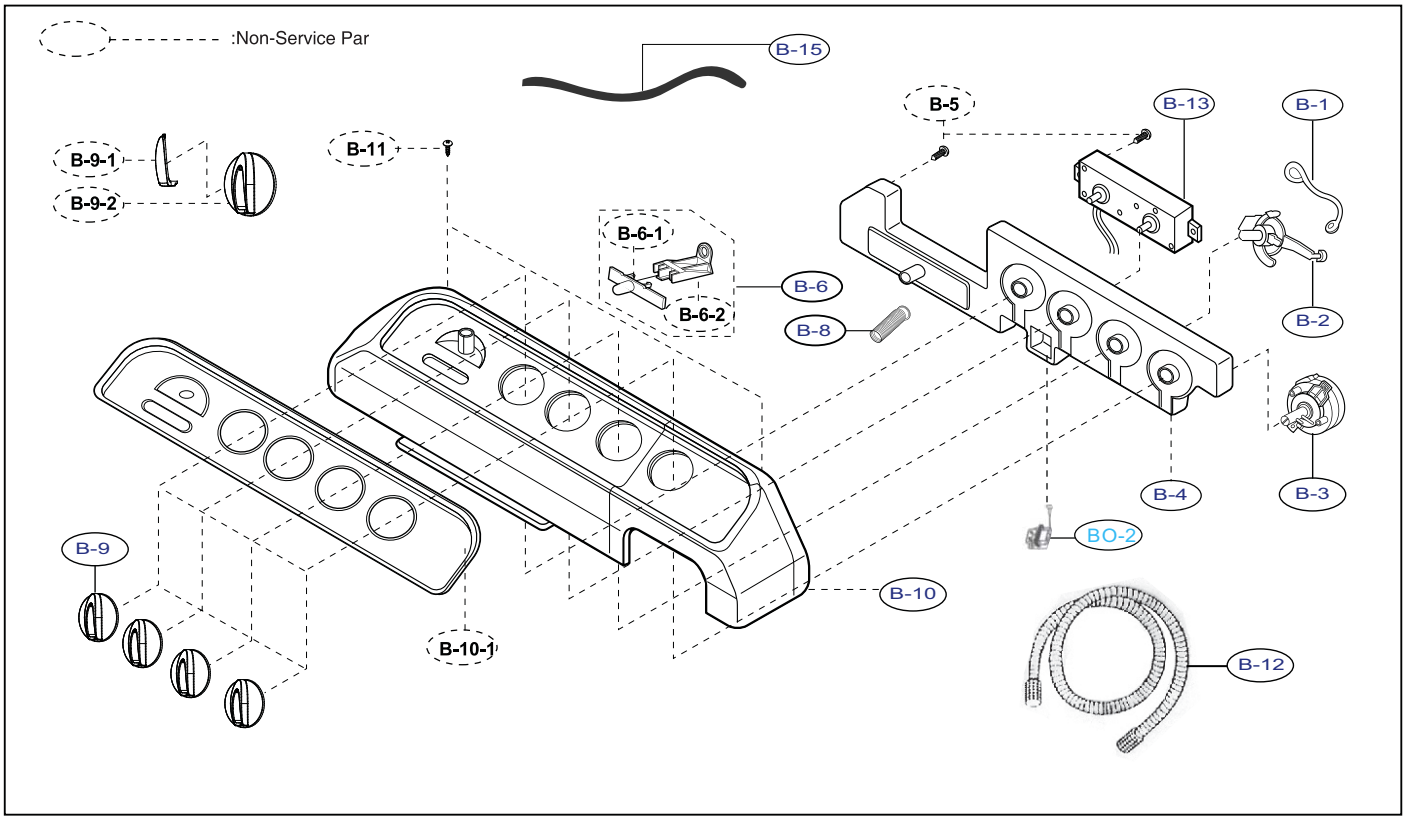

C. EXPLODED VIEWS OF SPIN DRYER BASKET PARTS

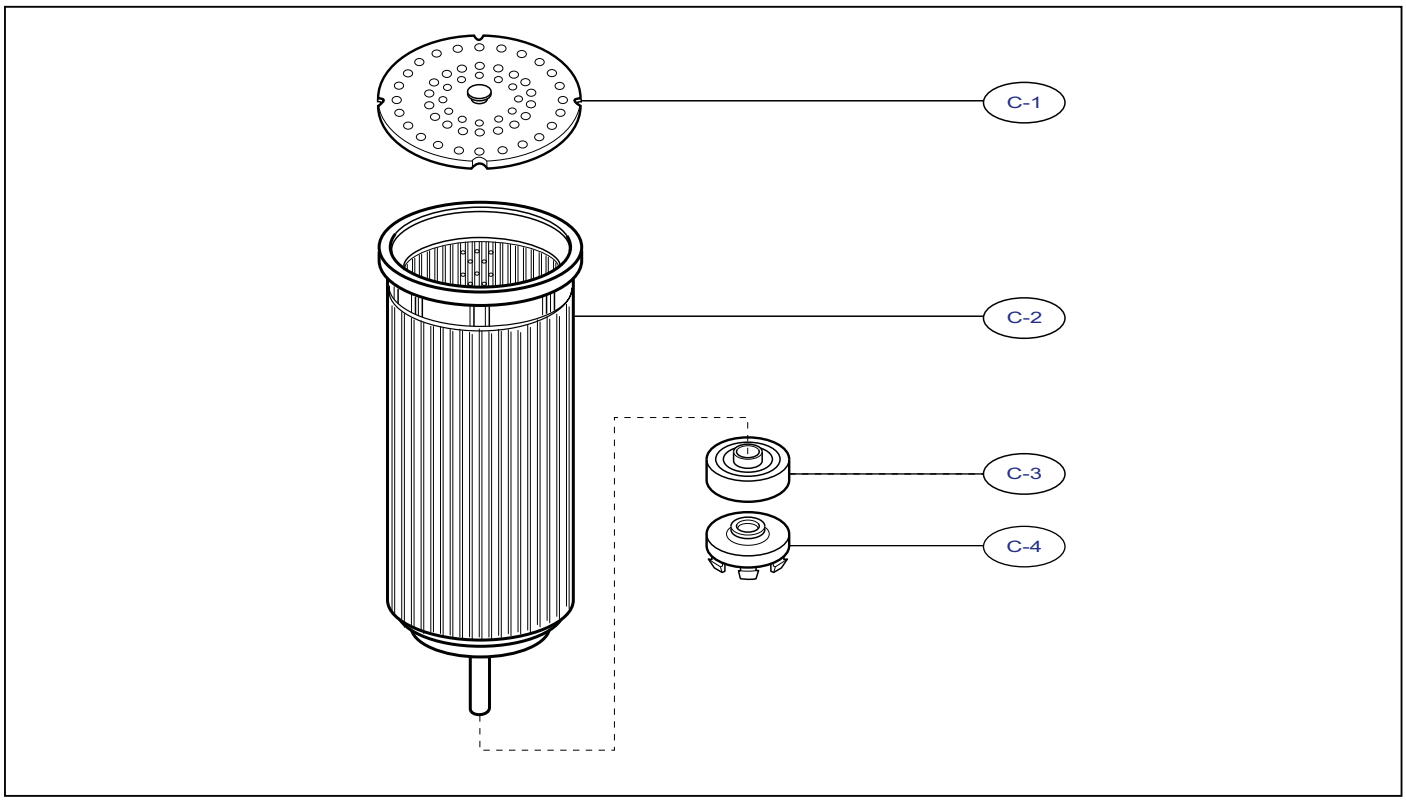

D. EXPLODED VIEWS OF TUB PARTS

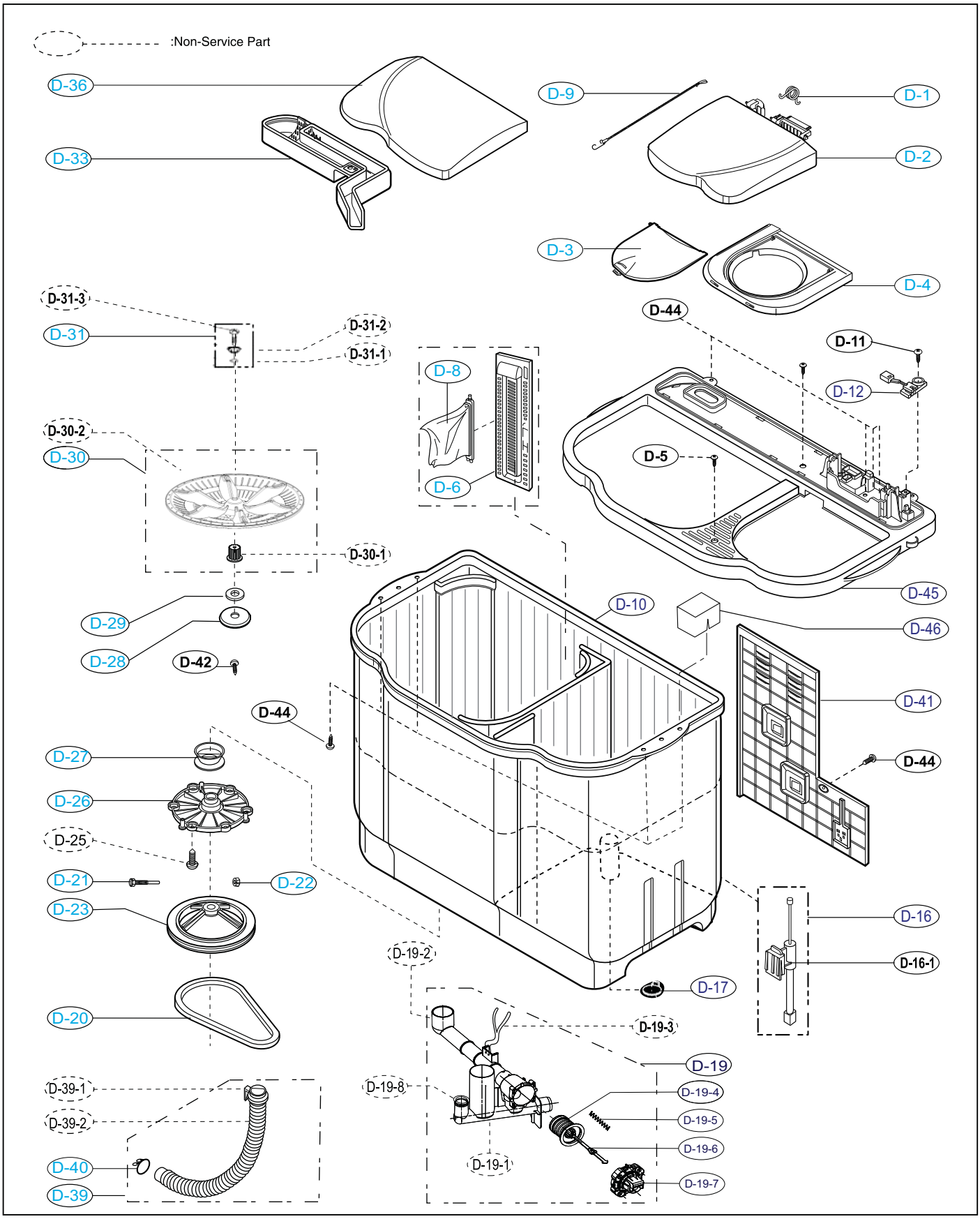

Note : L G Eletronics will not stop to develop our technology so part of washing machine please update in G C S C or person in charge of SVC field.

E. EXPLODED VIEWS OF MOTOR PARTS

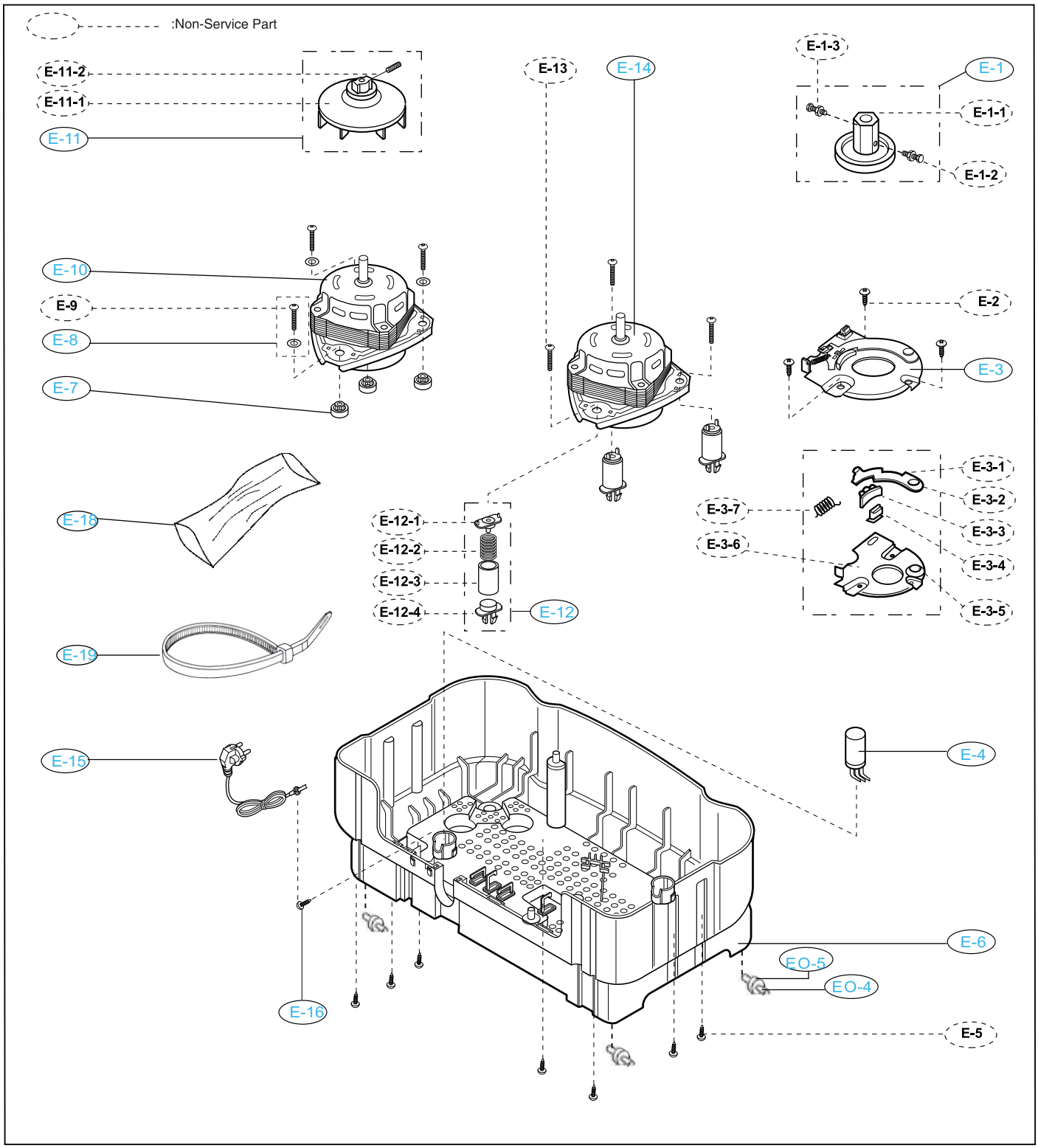

Note : LG Electronics will not stop to develop our technology so part of washing machine please update in GCSC or person in charge of SVC field.